REVISIONS					
ECO NO.	REV	DESCRIPTION	DATE	DRAFT	APPRV
1900342	0	NEW RELEASE	10/25/2018	PWM	MFB

NOTES:

1. DEPTH COVER TO BACK: 26.38 [670.1]
2. APPROXIMATE WEIGHT PER STACK:
   4 HIGH: 2816 lbs [1277 kg]
3. USE M6 X 25 BOLTS IN ALL POSTS UNLESS OTHERWISE NOTED.
4. USE M6 X 30 BOLTS PROVIDED AT THESE LOCATIONS.

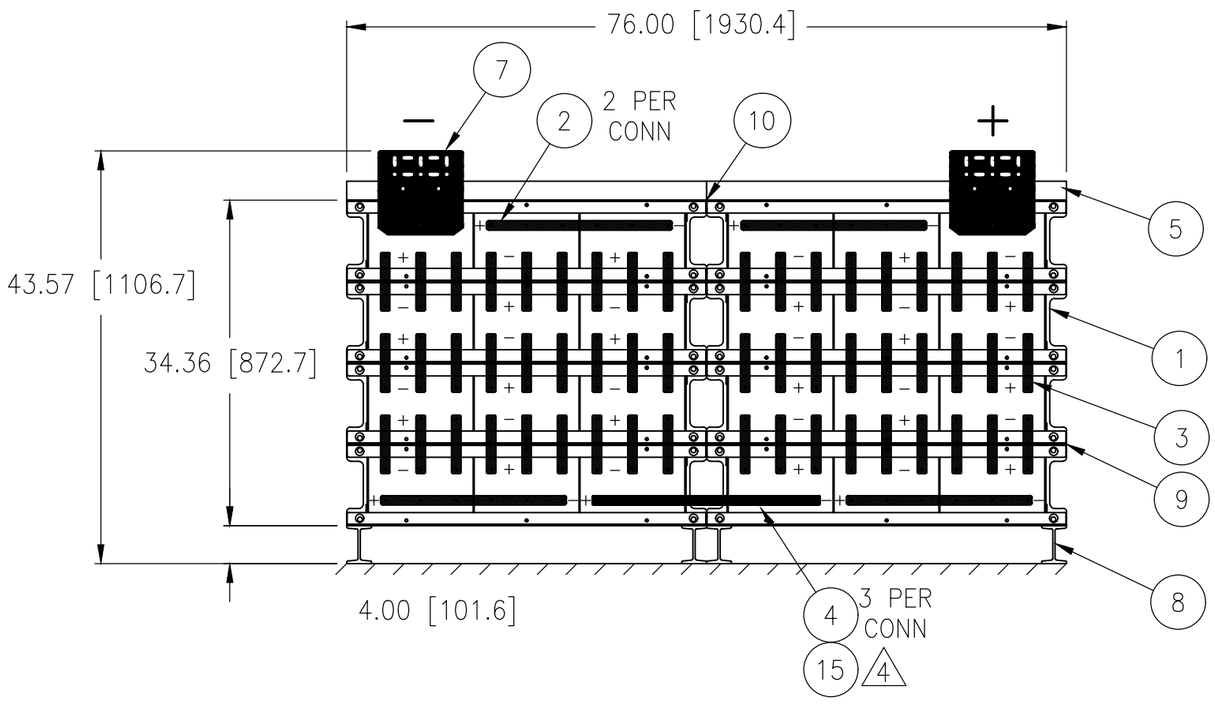

QTY	PART OR IDENT NO.	NOMENCLATURE OR DESCRIPTION	REMARKS	ITEM
6	W02-063001	BOLT M6 X 30 A2		15
138	W02-062501	BOLT M6 X 25 A2	NOT SHOWN	14
144	W03-0601	WASHER M6 X 6.4 17.0 3.0 A2	NOT SHOWN	13
2	K17-TPCOV029A	KIT COVER AGP-29 TOP ASSY CLEAR	NOT SHOWN	12
6	K17-ISCOV029A	KIT COVER AGP-29 STD ASSY CLEAR	NOT SHOWN	11
1	K17-417001	KIT TIE PLATE MECH STACK/STACK		10
6	K17-417000	KIT HARDWARE MECH INTERMOD		9
2	K17-417030	KIT HORIZONTAL SUPPORT		8
1	K17-417274	KIT TERMINAL PLATE TOP 29-33 PLT		7
1	K17-400403	KIT AGP ACCESSORY	NOT SHOWN	6
2	S11-420625-029	BRACKET TERM PLATE SUPPORT		5
3	L17-411090-001	CONNECTOR .75 X .12		4
54	L17-109209-010	CONNECTOR .75 X .06		3
8	L17-411091-001	CONNECTOR .75 X .12		2
8	M52-310029 (M53-310029)	003AGP 10029W −+−		1
X	M87-024-10029-024TAL(V)	24-100G29 LOW		X

PARTS LIST

PART NUMBER	PART REV
Z66-441226	AA
M87-024-10029-024TALV	AA
M87-024-10029-024TAL	AA

UNLESS OTHERWISE SPECIFIED
DIMENSIONS ARE IN INCHES
TOLERANCES ARE:

DECIMALS	[MM]	FRACTIONAL	ANGLE
.X±	X±		
.XX±	0.X±	±	±
.XXX±	0.XX±		

DO NOT SCALE DRAWING

THE USE OF INFORMATION CONTAINED HEREIN IS RESTRICTED FOR THE BENEFIT OF STRYTEN MANUFACTURING LLC ONLY. UNAUTHORIZED USE OR DISCLOSURE, COPYING OR OTHERWISE REPRODUCING (IN ANY MANNER) ANY PORTION OF THIS DRAWING WITHOUT PRIOR WRITTEN PERMISSION OF AN AUTHORIZED OFFICIAL OF STRYTEN MANUFACTURING LLC , IS PROHIBITED.

MATERIAL:
V-0 SYSTEM DENOTED BY ()

PROCESS:

REMOVE ALL BURRS AND BREAK SHARP EDGES

		DATE
DRAWN	P. MATTALIANO	10/25/2018
CHECK	P. MATTALIANO	10/25/2018
DESIGN	P. MATTALIANO	10/25/2018

THIRD ANGLE PROJECTION | CAD REFERENCE: CREATED WITH AC

DIMENSIONS IN [ ] ARE MILLIMETERS

STRYTEN MANUFACTURING

TITLE
24 CELL ABSOLYTE 100G29 (V-0)
2 STACKS/4 HIGH
3 HOURS OR LONGER BACKUP TO 1.75 VPC

SIZE	CAGE CODE	DRAWING NO.	REV
B	88219	441226	0

SCALE: 1/16 | THIS DWG. SUPERCEDES | SHEET 1 OF 1