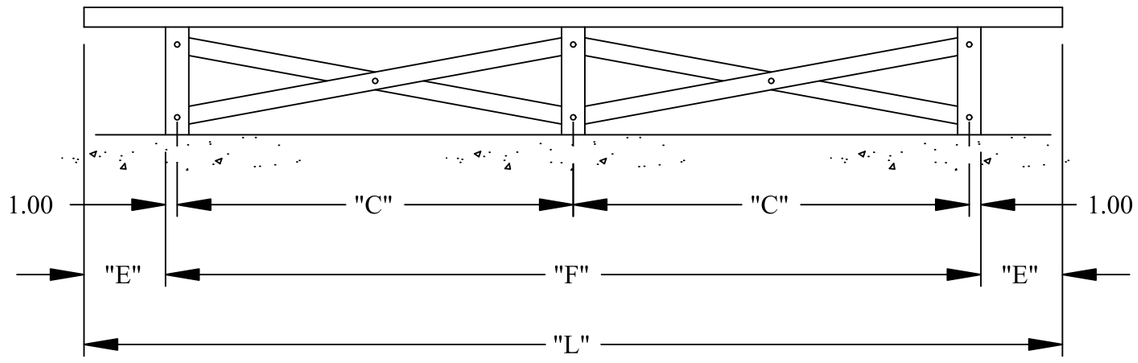

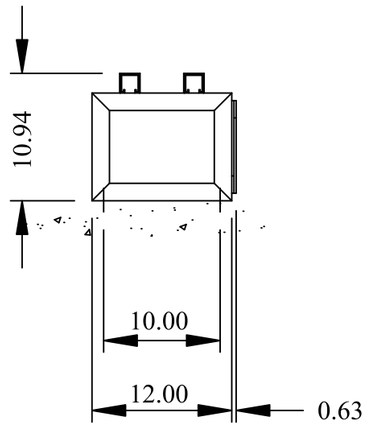

CATALOG NO.	AZMS NO.	"L" (in.)	"F" (in.)	"E" (in.)	"C" (in.)	WT. (lbs.)	# FRAMES
UC001T036A	UA11-036	36.00	36.00	-	34.00	48	2
UC001T048A	UA11-048	48.00	36.00	6.00	34.00	52	
UC001T060A	UA11-060	60.00	45.00	7.50	43.00	65	
UC001T072A	UA11-072	72.00	45.00	13.50	43.00	69	
UC001T084A	UA11-084	84.00	70.00	7.00	34.00	76	3
UC001T096A	UA11-096	96.00	70.00	13.00	34.00	79	
UC001T108A	UA11-108	108.00	88.00	10.00	43.00	92	
UC001T120A	UA11-120	120.00	104.00	8.00	34.00	97	4
UC001T132A	UA11-132	132.00	104.00	14.00	34.00	101	
UC001T144A	UA11-144	144.00	131.00	6.50	43.00	114	
UC001T156A	UA11-156	156.00	131.00	12.50	43.00	118	
UC001T168A	UA11-168	168.00	138.00	15.00	34.00	124	5
UC001T180A	UA11-180	180.00	174.00	3.00	43.00	137	
UC001T192A	UA11-192	192.00	174.00	9.00	43.00	141	
UC001T204A	UA11-204	204.00	174.00	15.00	43.00	145	
UC001T216A	UA11-216	216.00	202.00	7.00	40.00	158	6
UC001T228A	UA11-228	228.00	217.00	5.50	43.00	164	
UC001T240A	UA11-240	240.00	217.00	11.50	43.00	168	

RAIL OPTIONS, IDENTIFIED BY CATALOG NO. SUFFIX:
A - 2 GALVANIZED RAILS PER TIER (STANDARD)
AP - 2 PAINTED RAILS PER TIER
A3R - 3 GALVANIZED RAILS PER TIER
A3RP - 3 PAINTED RAILS PER TIER

TITLE: RACK, NON-SEISMIC, 1 TIER

EnerSys Power/Full Solutions ™

RESERVE POWER
READING, PA. 19605

THIS DRAWING AND THE INFORMATION CONTAINED THEREON IS SUBMITTED CONFIDENTIALLY AND IS THE PROPERTY OF EnerSys. USE, REPRODUCTION OR DISCLOSURE OF THE CONTENT OF THIS DRAWING OR ANY PORTION THEREOF FOR ANY PURPOSE MUST BE APPROVED IN WRITING BY EnerSys.

BATTERY: CA, CC, CX
CODE: UA11
REF.: 851300/17

RACK FAMILY: UC001TxxxA
REV. A

DO NOT SCALE DRAWING
DATE: 06/18/2009