NOTICE: THIS DRAWING AND THE INFORMATION DISCLOSED ON IT ARE CONFIDENTIAL AND PROPRIETARY TO C&D TECHNOLOGIES, INC. AND MAY NOT BE DUPLICATED, REPRODUCED, USED OR DISCLOSED BY OR TO ANY PERSON OR PARTY OUTSIDE OF THE COMPANY IN ANY WAY WITHOUT THE WRITTEN PERMISSION OF A DULY AUTHORIZED EMPLOYEE OF THE COMPANY. Copyright © 2004

ECN#12226

REVISION HISTORY

ZONE	REV	DESCRIPTION	ECN#	REV'D	CHK'D	DATE	APPROVED
	1	REVISED APPROX. SYSTEM WEIGHT AND NOTE 4 TO UPDATED STANDARD	13131	DCS		11/9/12	

24 VOLT SYSTEM
(12) AT-13P CELLS

APPROX. SYSTEM WEIGHT: 1,445 LBS. [655.5 kg]
FLOOR CONTACT AREA: 74.25 SQ. IN. [47,903 mm²]

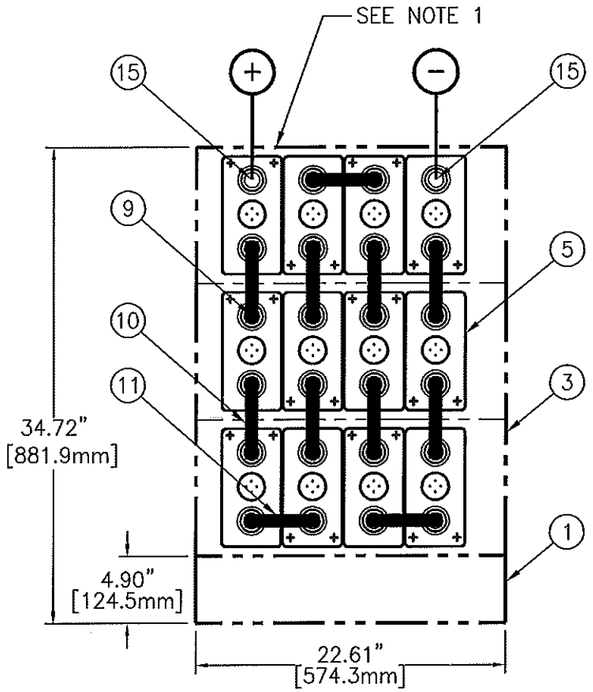

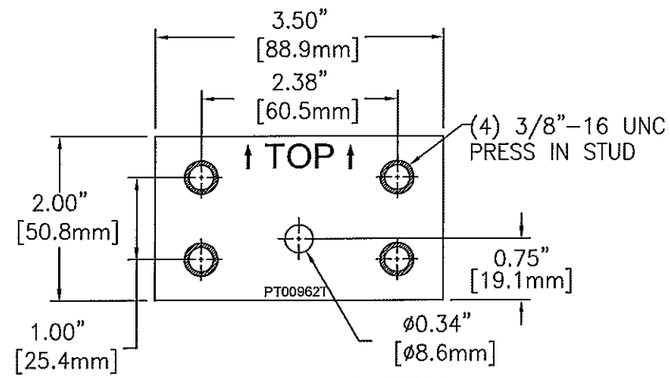

TERMINAL PLATE DETAIL
PART NO. PT00962T

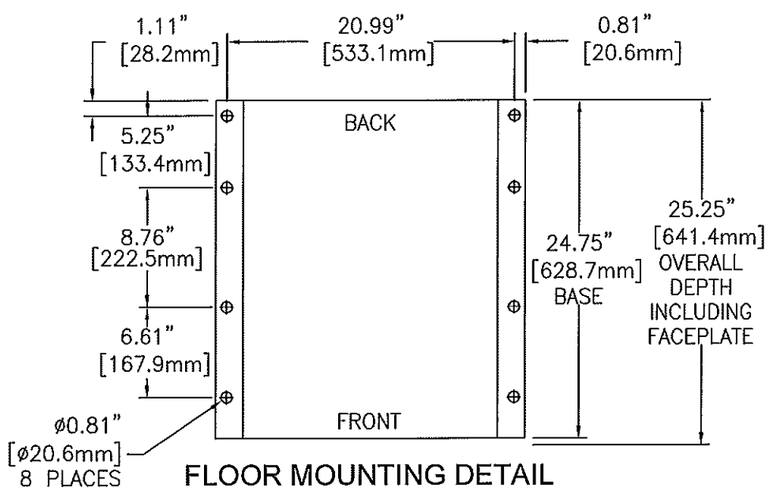

FLOOR MOUNTING DETAIL

NOTES:
1. LOCATE POLARITY OF BATTERIES FOR PROPER ORIENTATION DURING INSTALLATION.
2. FLOOR MOUNTING (ANCHOR) BOLTS ARE NOT FURNISHED.
3. INSTALLATION ANCHOR BOLT SIZE & TYPE ARE TO BE DETERMINED BY USER IN ACCORDANCE WITH BUILDING CODES APPLICABLE TO THE ARRANGEMENT DESCRIBED ON THIS DRAWING.
4. REFERENCE INSTALLATION MANUAL RS02044 FOR: CONNECTOR TORQUE VALUES, MODULE TO MODULE CONNECTIONS & FACEPLATE MOUNTING DETAILS.
5. CONNECTORS ARE SIZED TO LESS THAN 30mV DROP AT 228.2 AMPS (2 HOUR RATE TO 1.75 VPC).

m·s·endur II

SYSTEM NO. E1343012CE01

ITEM	QTY	PART NO.	DESCRIPTION
20	1	RE04454	ACCESSORY KIT (J29536)
19			
18			
17			
16			
15	2	PT00962T	TERMINAL PLATE (M15923)
14			
13			
12			
11	3	PK04260T	CONNECTOR 1.00 x 5.57 x 0.12
10	8	PK04225T	CONNECTOR 1.00 x 5.94 x 0.12
9	1	HDWR–R11	HARDWARE KIT, CONNECTOR
9.1	24	PB00327	BOLT, HEX 5/16–18 x 1.25 S.S
9.2	24	PH01700	WASHER, FLAT S.S.
8	3	PH04006–22	FACEPLATE (K11056)
7	4	HDWR–R13	HARDWARE KIT, FACEPLATE (J29535)
5	12	CW18195	CELL (N03375)
3	3	RD04496–22C	MODULE ASSEMBLY KIT (M14111)
1	1	RD04407–22A	BASE ASSEMBLY KIT (M14028)

UNLESS OTHERWISE SPECIFIED DIMENSIONS ARE IN INCHES & TOLERANCES ON: DECIMALS X .XX .XXX ANGLES ±.12"
THIRD ANGLE PROJECTION
MATERIAL: SEE BOM ABOVE
PER: SPEC:

		DATE
DRAWN	R. DAVEY	9/29/08
CHECKED	G. KUKEL	9/30/08
APPROVED	P. RALSTON	9/30/08
APPROVED		

FILE: E1343012CE01

ALL SHEETS ARE THE SAME REVISION STATUS

C&D TECHNOLOGIES, INC.
1400 UNION MEETING, BLUE BELL, PA 19422-0588
www.cdtechno.com

TITLE: CONNECTION DIAGRAM 24V 4X3 AT–13P

SIZE	CAGE CODE	DRAWING NUMBER	REVISION
D		E1343012CE01	1

SCALE NTS — SHEET 1 OF 1

12/2000